1861374
Travis CN Twin Bed
Parts List

A.	Headboard	1 pc
B.	Footboard	1 pc
C.	Side Rails	2 pcs
D.	Support Slats	13 pcs
E.	Phillips Head Screws	26 pcs
F.	Phillips Head Screwdriver	1 pc

Use only Bombay KIDS replacement parts. Call the following number to request the part, 1-800 829-7789.
* Please make sure that you have all the parts indicated above before you begin assembly of this item.
* This item should be assembled on a soft surface to prevent scratching the finish during assembly.
* This item may require periodic tightening.

Hardware Illustrations

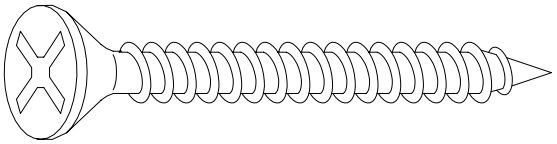

E. Phillips Head Screw

1861374
Travis CN Twin Bed

Assembly Instructions

1. **Attach Side Rails (C)** Insert the exposed hooks of Side Rails (C) into the pre-bored slots of the Headboard (A). Press down Side Rails (C) onto the pins in the the Headboard (A). Make sure that the hooks are all the way down onto the pins**.** See illustration.
2. Repeat above step to attach Side Rails (C) to Footboard (B).
3. **Attach Support Slats (D)** Align the pre-drilled holes in the ends of Support Slats (D) with the pre-drilled holes in the cleat rails of Support Slats (D). Secure with Phillips Head Screws (E) using Phillips Head Screwdriver (F). See illustration.

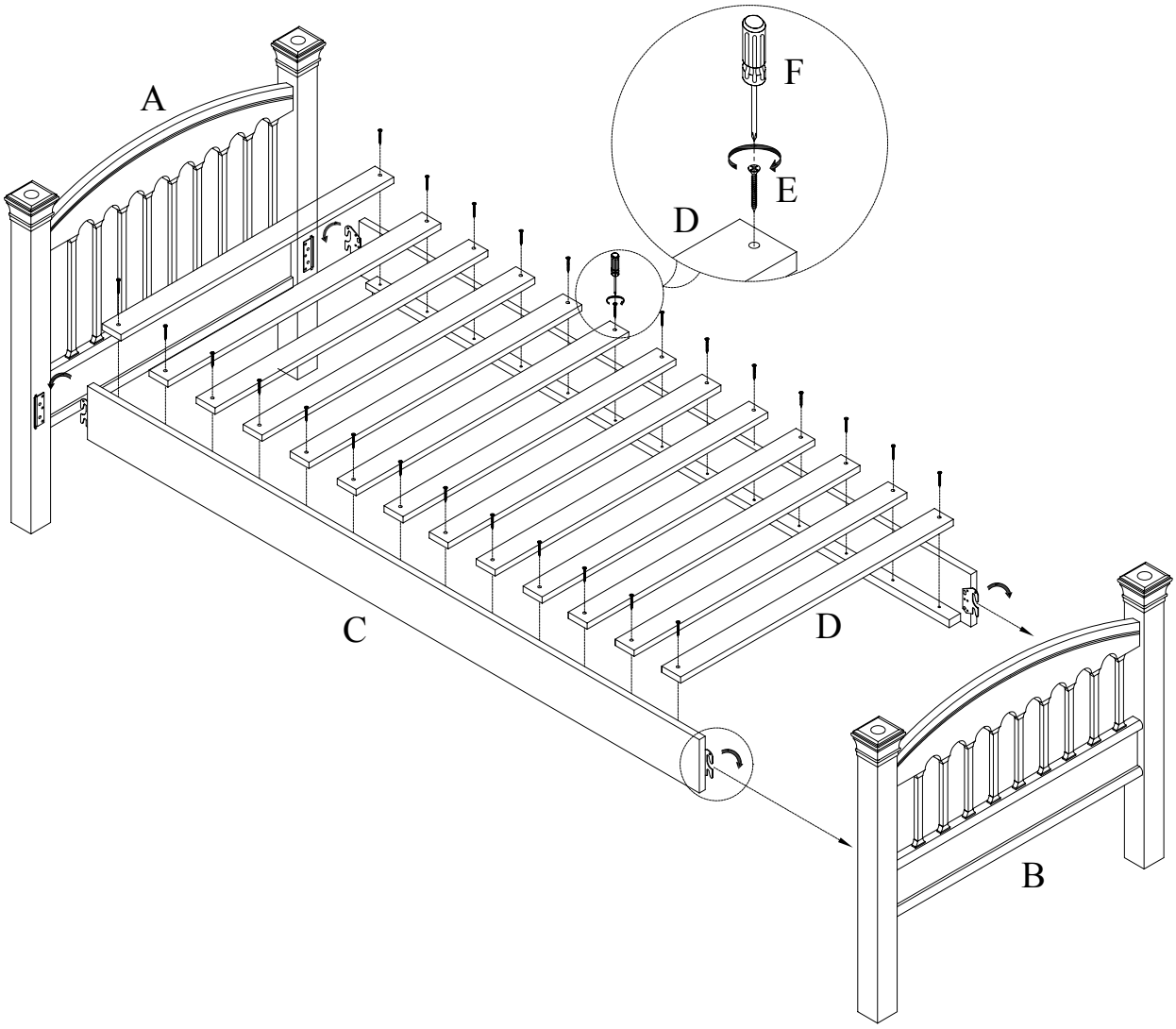

R1-11-4-03